comer industries
gearboxes

| COMPANY | REF. | DESIGNATION LF-205 J |
|---|---|---|
| | DATE 08-11-2006 | CODE 9.205.805.00 |

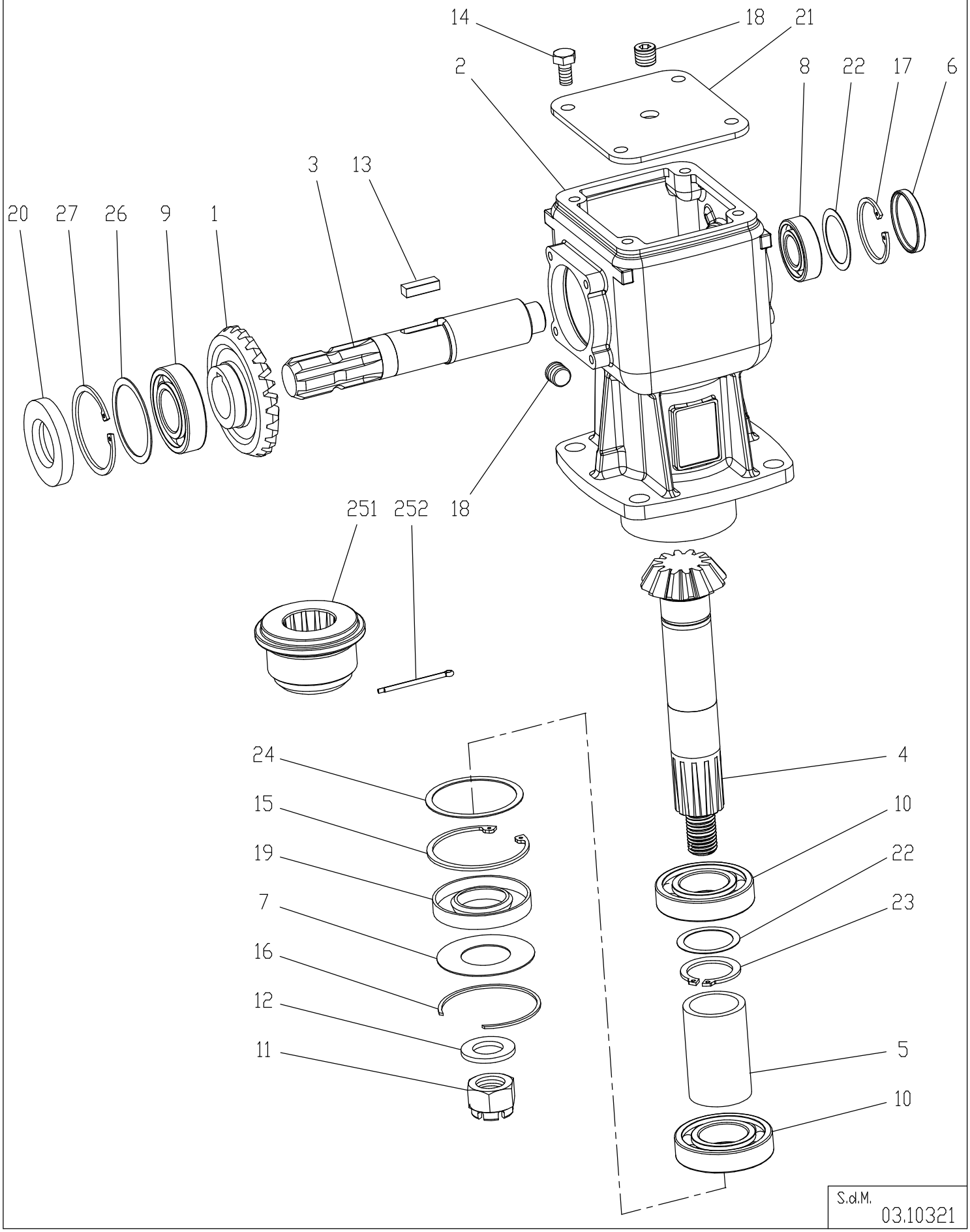


S.d.M. 03.10321

COMER INDUSTRIES S.p.A. 42046 Villanova di Reggiolo (R.E.) Italia Tel. 0522\974111 (9 Linee) Telefax 0522\973249

| comer industries gearboxes | RIF. . | COMPANY: COMMERCIAL | | INDEX 03 | COM. N° 010.321 |
|---|---|---|---|---|---|
| | RATIO | FIG. MONT. | COD.LETT. LF-205J | CODE | |
| | 1 : 1.92 | 21 - 22 | COD.NUM. 205 | 9.205.805.00 | |

| POS. | DRG. Nr. | PCS. | DESCRIPTION |
|---|---|---|---|
| 1 | 0.135.5000.00 | 1 | CROWN GEAR Z23 M5 |
| 2 | 0.205.0300.00 | 1 | CASING |
| 3 | 0.135.2001.00 | 1 | INPUT SHAFT 1"3/8 Z6 |
| 4 | 0.135.6008.00 | 1 | PINION Z12 M5 |
| 5 | 0.135.7105.00 | 1 | SPACER |
| 6 | 8.7.0.00693 | 1 | OIL CAP (ø52x7) |
| 7 | 1.135.7100.00 | 1 | PROTECTIVE WASHER |
| 8 | 8.0.1.00034 | 1 | BALL BEARING 6205 (25x52x15) |
| 9 | 8.0.1.00870 | 1 | BALL BEARING 6207 (35x72x17) |
| 10 | 8.0.1.00871 | 2 | BALL BEARING 6208 (40x80x18) |
| 11 | 8.2.2.00515 | 1 | CASTLE NUT M24X2 |
| 12 | 8.3.2.00409 | 1 | BOLT WASHER (25x44x4) |
| 13 | 8.4.1.00993 | 1 | PARALLEL KEY B (10X8X30) |
| 14 | 8.1.1.00054 | 4 | BOLTS M10x20 HHB (8.8) |
| 15 | 8.5.2.00030 | 1 | SNAP RING (80x83.5x2.5 , FOR HOLES) |
| 16 | 8.5.3.00955 | 1 | SNAP RING SB 81 |
| 17 | 8.5.2.01358 | 1 | SNAP RING (52x55x2.5 , FOR HOLES) |
| 18 | 8.6.6.00201 | 2 | 3/8" GAS SOLID PLUG |
| 19 | 8.7.1.00748 | 1 | DUST LIP (40X80X12) |
| 20 | 8.7.3.00055 | 1 | OIL SEAL (35X72X10) |
| 21 | 0.205.1300.00 | 1 | COVER |
| 22 | 0.244.7500.00 | 2 | SHIM KIT (40.3x51.5) |
| 23 | 8.5.1.00680 | 1 | SNAP RING (40x37.5x2.5 , FOR SHAFTS) |
| 24 | 0.267.7500.00 | 1 | SHIM KIT (69x79.7) |
| 25 | 0.124.7135.00 | 1 | NAME PLATE |
| 26 | 0.248.7500.00 | 1 | SHIM KIT (60.3x71.7) |
| 27 | 8.5.2.00131 | 1 | SNAP RING (72x75x2.5 , FOR HOLES) |

## A.119.003 (SHIPPED SEPARATELY)

| POS. | DRG. Nr. | PCS. | DESCRIPTION |
|---|---|---|---|
| 251 | 0.135.7000.00 | 1 | BUSHING GROOVED |
| 252 | 8.4.7.00516 | 1 | COTTER PIN B5x50 |
| | | | |
| | | | |
| | | | |